UNIVERSITY OF CAMBRIDGE INTERNATIONAL EXAMINATIONS
General Certificate of Education Advanced Level

CANDIDATE NAME

CENTRE NUMBER

CANDIDATE NUMBER

* 3 4 9 9 5 8 9 2 3 6 *

PHYSICS **9702/05**

Paper 5 Planning, Analysis and Evaluation **October/November 2007**

1 hour 15 minutes

Candidates answer on the Question Paper.

No Additional Materials are required.

READ THESE INSTRUCTIONS FIRST

Write your Centre number, candidate number and name on all the work you hand in.
Write in dark blue or black pen.
You may use a soft pencil for any diagrams, graphs or rough working.
Do not use staples, paper clips, highlighters, glue or correction fluid.
DO **NOT** WRITE IN ANY BARCODES.

Answer **all** questions.
You may lose marks if you do not show your working or if you do not use appropriate units.

At the end of the examination, fasten all your work securely together.
The number of marks is given in brackets [ ] at the end of each question or part question.

For Examiner's Use	
1	
2	
Total	

This document consists of **8** printed pages.

© UCLES 2007

1 Double glazing can be used for sound insulation. Double-glazed windows consist of two panes of glass with air in the space between them. Manufacturers reduce the air pressure in the space between the panes of glass to reduce the amplitude of sound transmitted through the window.

It is suggested that the amplitude A of sound transmitted through a double-glazed window is related to the air pressure p in the space between the panes by the equation

$$A = k\sqrt{p}$$

where k is a constant.

Fig. 1.1 shows a laboratory model of a double-glazed window. It consists of two panes of glass. There is a tube connected to the space between the two panes so that air may be removed.

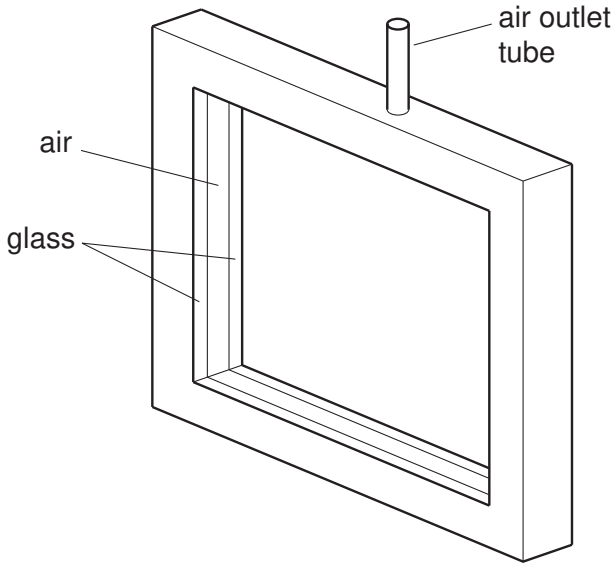

Fig. 1.1

Design a laboratory experiment to investigate whether A is related to p as indicated in the above equation when p is reduced. You should draw a diagram showing the arrangement of your equipment. In your account you should pay particular attention to

(a) the procedure to be followed,

(b) how the air pressure between the panes of glass would be measured,

(c) how the amplitude of the sound would be measured,

(d) the control of variables,

(e) how the data would be analysed,

(f) any safety precautions that you would take.

[15]

© UCLES 2007

Diagram

.....

.....

.....

.....

.....

.....

.....

.....

.....

.....

.....

.....

.....

.....

.....

For Examiner's Use

© UCLES 2007

2 An experiment is carried out to investigate how the current in a filament lamp varies with the potential difference across it.

An electric circuit is set up as shown in Fig. 2.1.

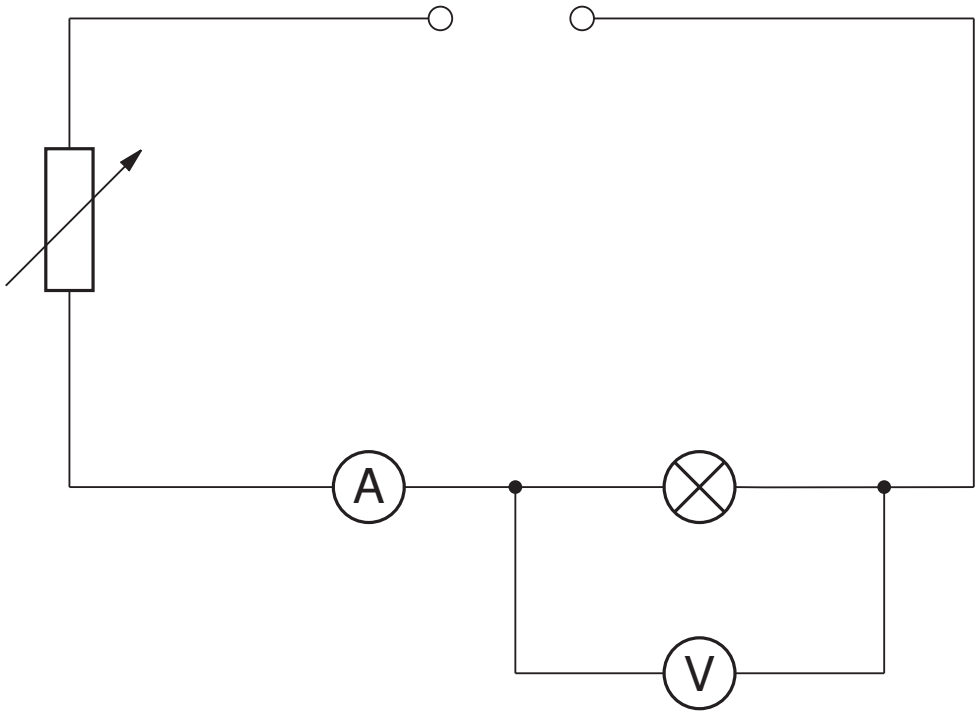

Fig. 2.1

Values of the potential difference V and the current I are given in Fig. 2.2.

V / V	I / A		
2.0	1.2 ± 0.1		
4.0	1.7 ± 0.1		
6.0	2.1 ± 0.1		
8.0	2.4 ± 0.1		
10.0	2.7 ± 0.1		
12.0	3.0 ± 0.1		

Fig. 2.2

It is suggested that V and I are related by the formula

$$I = kV^n$$

where k and n are constants.

(a) Explain why plotting a graph of lg (I/A) against lg (V/V) would enable you to confirm the relationship between V and I.

.....

.....

..... [1]

(b) Calculate and record values of lg (V/V) and lg (I/A) in Fig. 2.2. Include in the table the absolute errors in lg (I/A). [3]

(c) **(i)** Plot a graph of lg (I/A) (y-axis) against lg (V/V) (x-axis). Include error bars for lg (I/A). [2]

(ii) Draw the best-fit straight line and a worst acceptable straight line on your graph. Both lines should be clearly labelled. [2]

(iii) Determine the gradient of the best-fit line. Include the error in your answer.

gradient = ... [2]

© UCLES 2007

For Examiner's Use

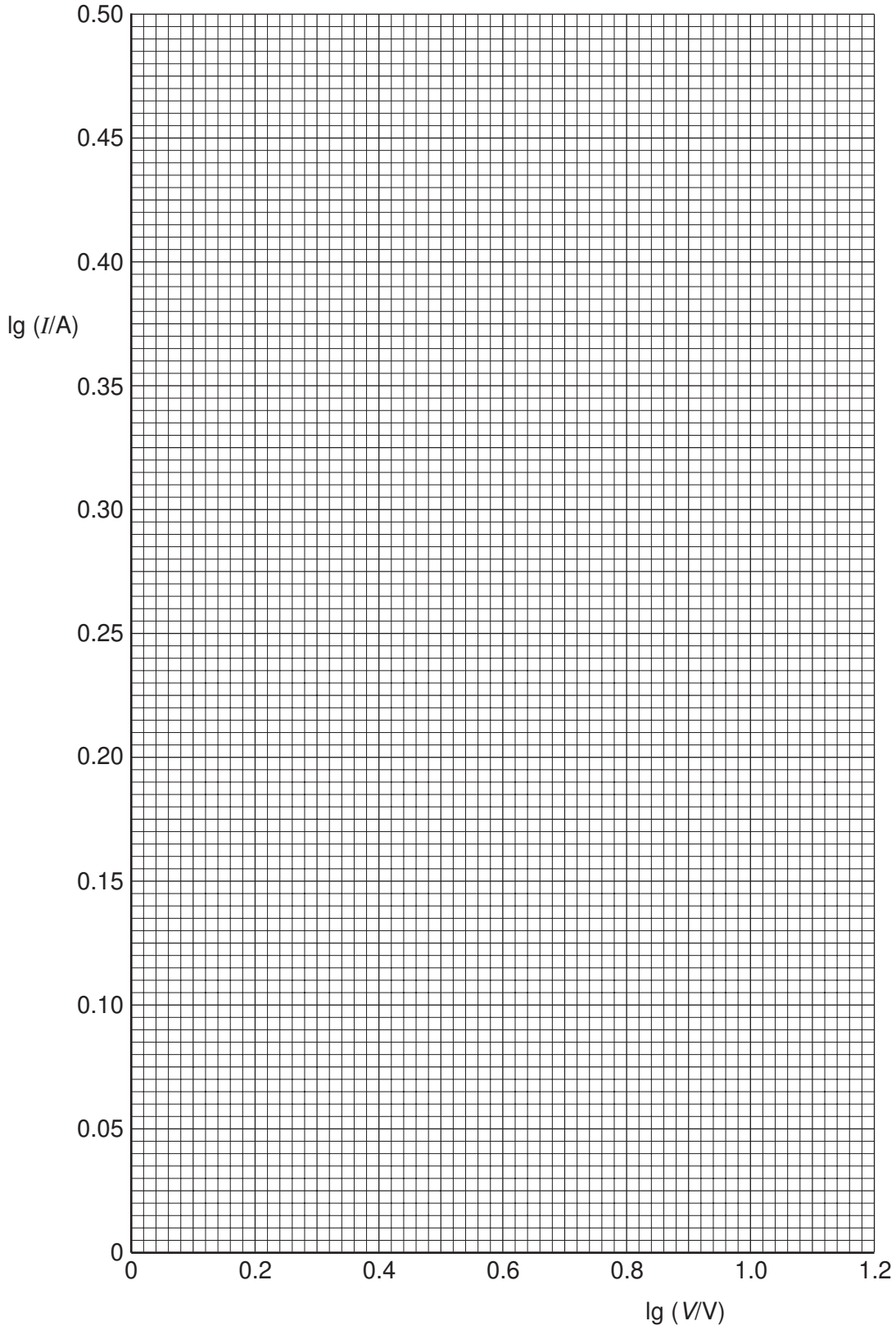

(iv) Determine the *y*-intercept of the best-fit line. Include the error in your answer.

y-intercept = ... [2]

(d) Using the answers to **(c) (iii)** and **(c) (iv)**, determine the values of *k* and *n*. Include the error in your values. You need not be concerned with the units of *k* and *n*.

k = ...

n = ... [3]

Permission to reproduce items where third-party owned material protected by copyright is included has been sought and cleared where possible. Every reasonable effort has been made by the publisher (UCLES) to trace copyright holders, but if any items requiring clearance have unwittingly been included, the publisher will be pleased to make amends at the earliest possible opportunity.

University of Cambridge International Examinations is part of the Cambridge Assessment Group. Cambridge Assessment is the brand name of University of Cambridge Local Examinations Syndicate (UCLES), which is itself a department of the University of Cambridge.